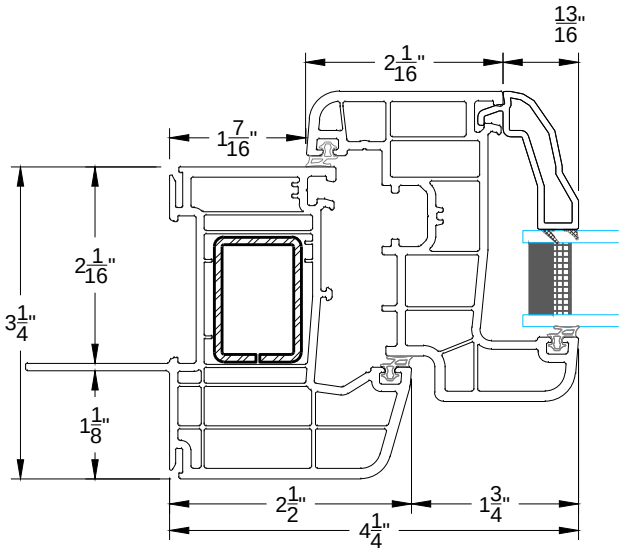

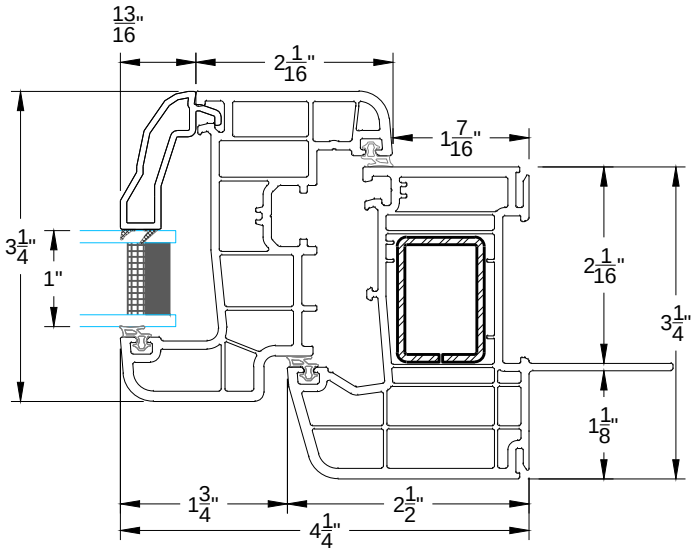

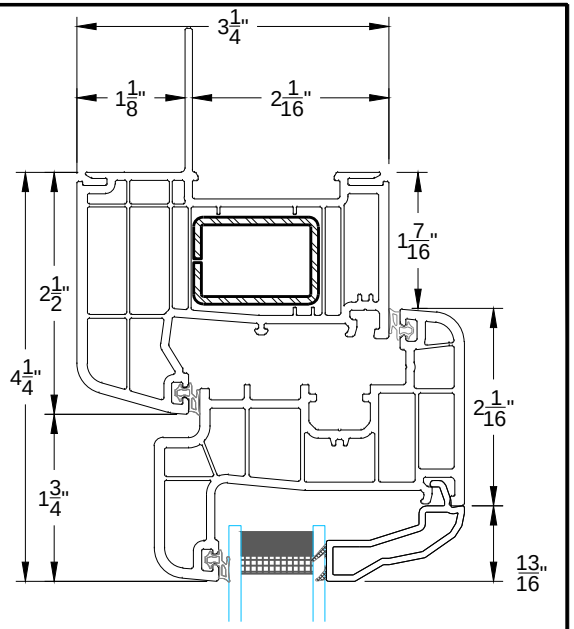

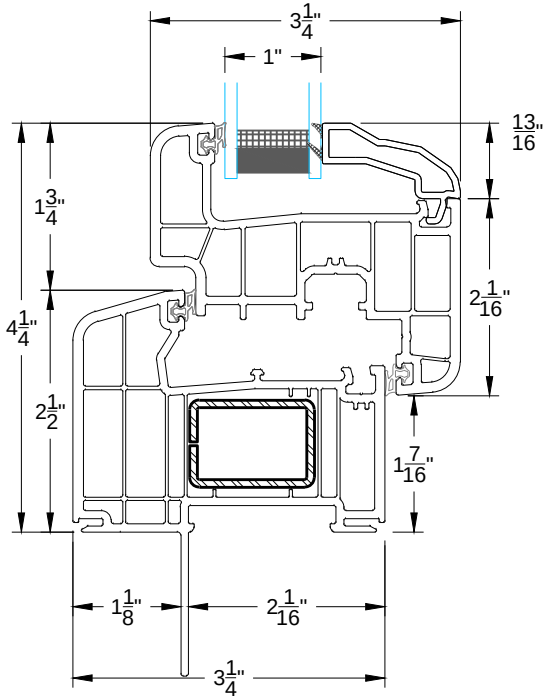

WESTECK WINDOWS & DOORS

fenestration canada
WESTECK WINDOWS MFG INC. 2017 MEMBER IN GOOD STANDING

THESE DRAWINGS ARE WESTECK'S CONFIDENTIAL AND PROPIETARY INFORMATION AND SHALL NOT BE GIVEN TO ANY OTHER PERSON OR COMPANY WITHOUT WESTECK'S PRIOR WRITTEN CONSENT

REV.	DATE	DESCRIPTION
A	-	-
B	-	-
C	-	-
D	-	-
E	-	-
F	-	-

CUSTOMER APPROVAL (SIGNATURE)

SCALE	1:2
DATE	05-21-2019
SALES REP	-
DRAWN BY	-

ORDER NUMBER: -

Revolution XL - Tilt & Turn Window

DRAWING NUMBER: D1